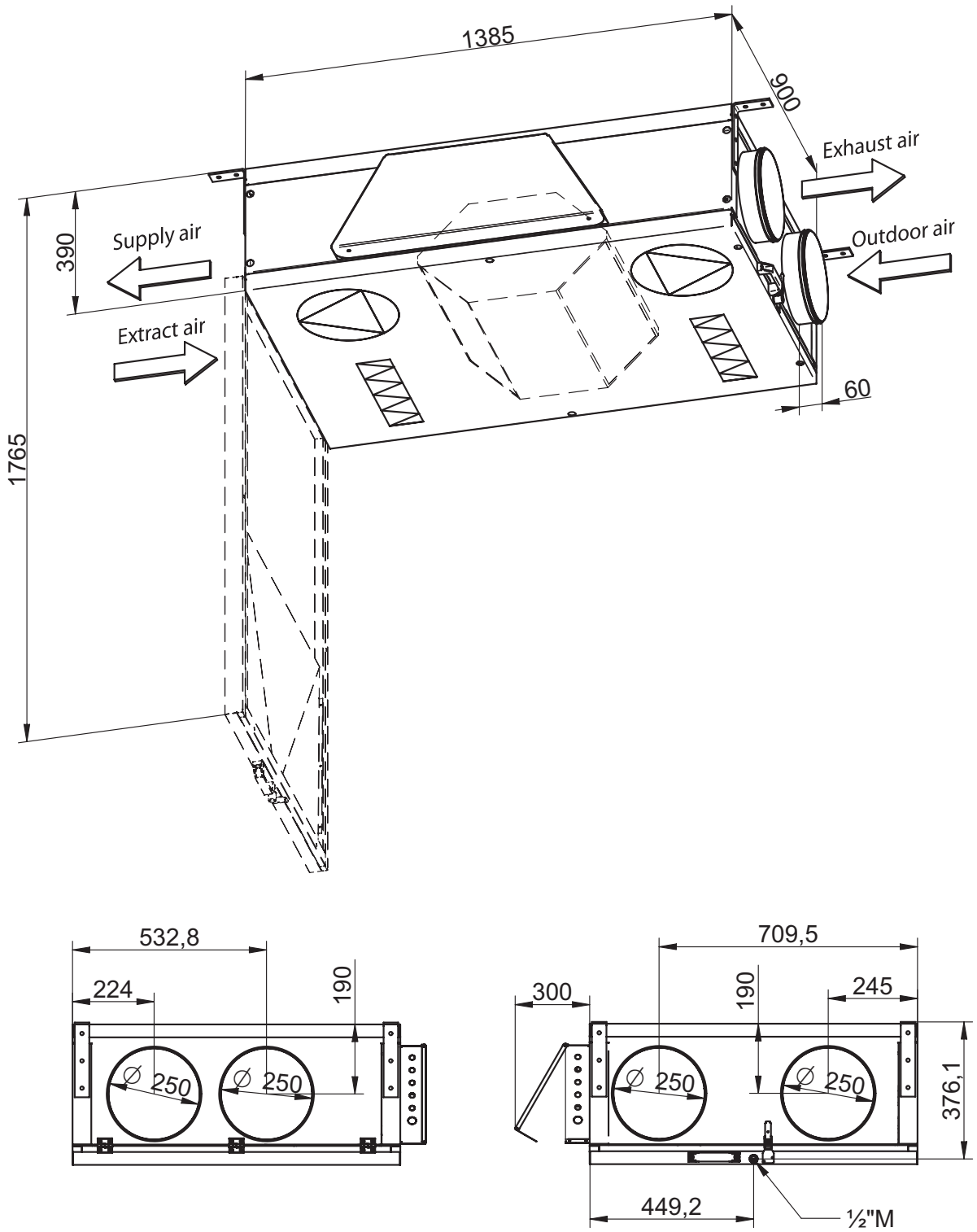0.1 Principle dimensions VEX320C